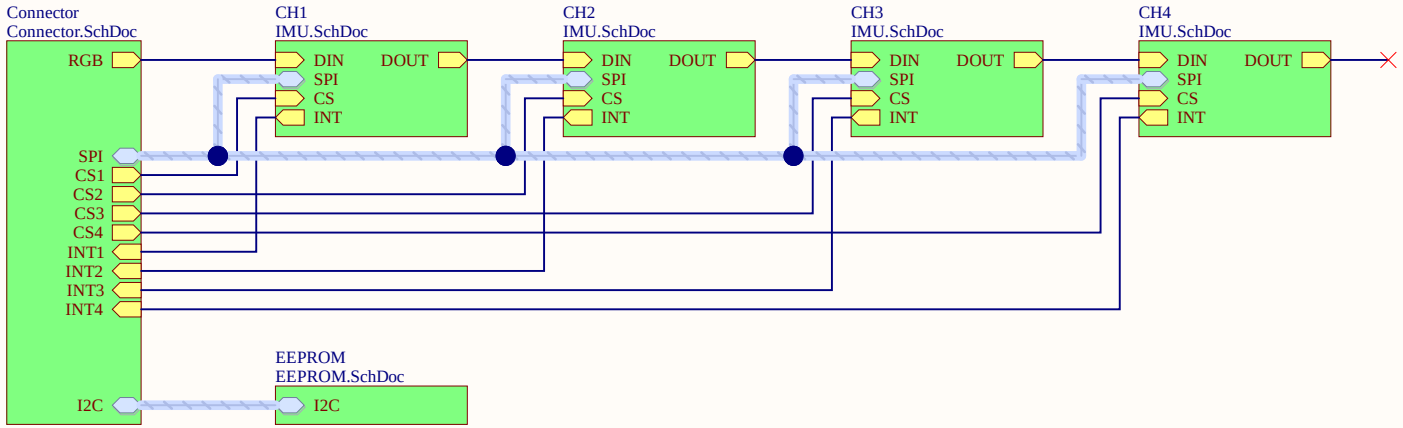

TITLE	Main.SchDoc		
SIZE A4	PROJECT Twintig IMUs		VERSION v1.0.5
VARIANT	[No Variations]	SHEET 1	OF 4
AUTHOR	Seb Madgwick	DATE	3/16/2026

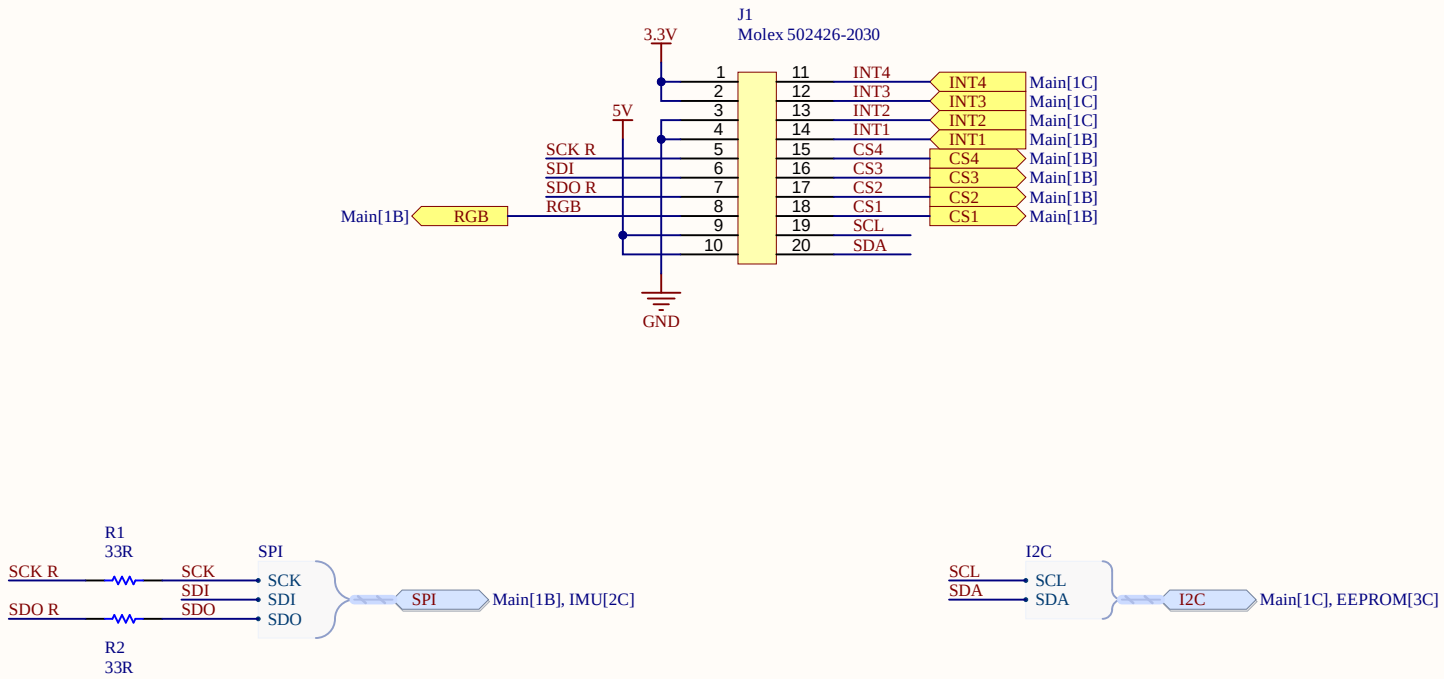

TITLE	Connector.SchDoc		
SIZE A4	PROJECT Twintig IMUs		VERSION v1.0.5
VARIANT	[No Variations]	SHEET 2	OF 4
AUTHOR	Seb Madgwick	DATE	3/16/2026

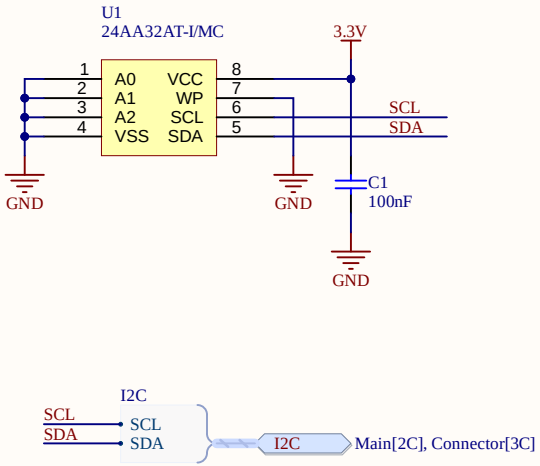

TITLE	EEPROM.SchDoc		
SIZE A4	PROJECT Twintig IMUs		VERSION v1.0.5
VARIANT	[No Variations]	SHEET 3	OF 4
AUTHOR	Seb Madgwick	DATE	3/16/2026

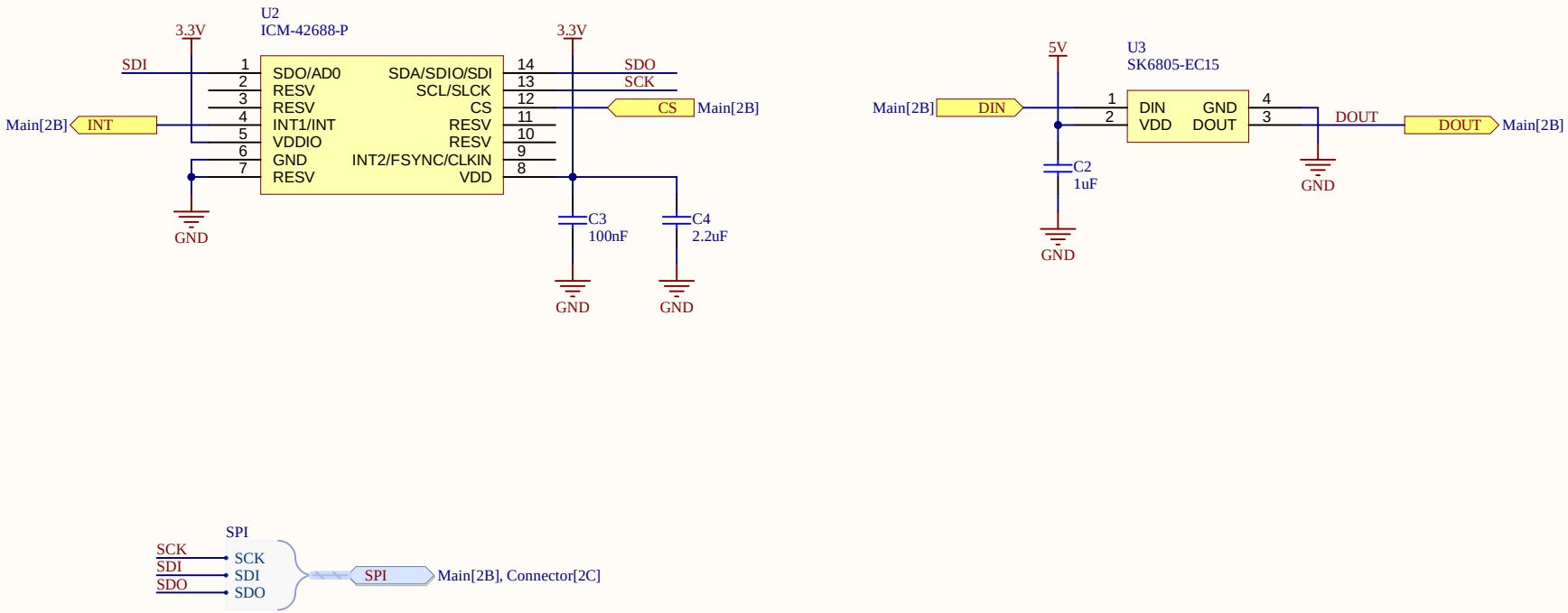

TITLE	IMU.SchDoc		
SIZE A4	PROJECT Twintig IMUs		VERSION v1.0.5
VARIANT	[No Variations]	SHEET 4	OF 4
AUTHOR	Seb Madgwick	DATE	3/16/2026

Twintig IMUs v1.0.5

Twinfin_MMs v1.0.4

Designator	Quantity	Comment	Footprint
C1, C3_CH1, C3_CH2, C3_CH3, C3_CH4	5	100nF	Capacitor 0201
C2_CH1, C2_CH2, C2_CH3, C2_CH4	4	1uF	Capacitor 0201
C4_CH1, C4_CH2, C4_CH3, C4_CH4	4	2.2uF	Capacitor 0201
J1	1	Molex 502426-2030	Molex 502426-2030
R1, R2	2	33R	Resistor 0201
U1	1	24AA32AT-I/MC	TDFN-8 2x3mm
U2_CH1, U2_CH2, U2_CH3, U2_CH4	4	ICM-42688-P	ICM-42688-P
U3_CH1, U3_CH2, U3_CH3, U3_CH4	4	SK6805-EC15	SK6805-EC15